biological microscopes

The Euromex biological BlueLine educational product range is the product of many years of experience and the extensive knowledge of our optical engineers. Input from practice teachers, professors and students in combination with the high-level design and manufacturing capabilities of Euromex have resulted in these high quality instruments

The outstanding optical performance of the ergonomic Euromex BlueLine microscopes enables long productive working sessions for initiation, intermediate and advanced science teaching classes

education

biological microscopes

MICROBLUE • PAGE 10
ECOBLUE • PAGE 16
BIOBLUE • PAGE 22
BIOBLUE.LAB • PAGE 28
BSCOPE • PAGE 32
ISCOPE • PAGE 38

BIOLOGICAL MICROSCOPES

BlueLine DUTCH QUALITY

NeoLED™ euromex optical technology

● *Monocular model MB.1051*

MicroBlue

The modern MicroBlue is an entry-level microscope, especially appreciated when budgets are limited. The basic model comes with a fixed lens condenser and a plain stage

All models with an integrated mechanical stage are supplied with an Abbe condenser. All models are equipped with 35 mm achromatic objectives. The built-in rechargeable batteries enable cordless operation

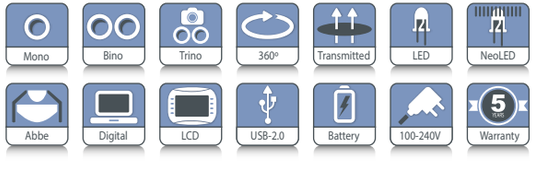

MONOCULAR MODEL MB.1001
298 (h) x 151 (w) x 202 mm (d) | 2.0 kg
MONOCULAR, MECHANICAL STAGE MB.1151
298 (h) x 151 (w) x 202 mm (d) | 2.2 kg
BINOCULAR MODEL, MECHANICAL STAGE MB.1152
298 (h) x 151 (w) x 202 mm (d) | 2.8 kg

● *Binocular model MB.1152*

HIGHLIGHTS

- **Entry-level microscopes**
- **Monocular and binocular models**
- **Revolving reversed nosepiece**
- **Integrated X-Y mechanical stage**
- **LED and NeoLED™ illumination**
- **Cordless operation**
- **Ergonomic carrying grip**
- **5 Years warranty**

SPECIFICATIONS

EYEPIECE(S)

Wide field WF 10x/18 mm secured eyepiece with pointer. The eyepieces of the binocular models are supplied without pointer

HEAD

Monocular models have a 45° inclined tube. Binocular and trinocular models have 45° inclined tubes, adjustable interpupillary distance between 48 and 75 mm and a ± 5 diopter adjustment on left tube. All heads are 360° rotatable. Models with an integrated USB-2.0 camera are supplied with a 5.0 MP 1/2.8" CMOS sensor with 2560 x 1920 pixels resolution. The trinocular head has a fixed light path beam splitter (50:50) and generates an erect image. The MicroBlue can also be equipped with an LCD screen

NOSEPIECE

Revolving nosepiece for three or four reversed objectives on ball bearings

OBJECTIVES

Achromatic 4x/0.10, 10x/0.25 and S40x/0.65. Models with S60X or S100x oil immersion are also available

The S40x, S60x and S100x oil immersion objectives are spring loaded. All optics are anti-fungus treated and anti-reflection coated for maximum light throughput

FOCUSING

Coaxial coarse and fine adjustments, 200 graduations, 15 µm per graduation, 3 mm per rotation, total travel range is approximately 15 mm. Supplied with an adjustable rack stop to prevent damage to sample and objectives. The coarse adjustments are equipped with friction control

STAGE

All models are supplied with a 115 x 100 mm stage with integrated 55 x 20 mm X-Y mechanical stage, except for the basic model MB.1001(-LCD), which is supplied with a 105 x 105 mm stage and two non-removable clamps

CONDENSER

Height adjustable Abbe condenser N.A. 1.25 with iris diaphragm and filter holder, except for the MB.1001(-LCD) model, which is equipped with a single N.A. 0.65 condenser with built-in iris diaphragm

ILLUMINATION

All monocular versions are supplied with an adjustable 1 W LED illumination system. The binocular versions are supplied with a replaceable 1 W NeoLED™ illumination system for increased light output. All models have internal rechargeable batteries with an external 100-240 V battery charger/ mains adapter

CAMERA AND SOFTWARE*

Models with an integrated 5.0 MP CMOS USB-2.0 camera are supplied with the ImageFocus Plus software. Besides capturing of images and videos this software allows measurements on still and live images and annotations on captured images. Compatible with Windows 7, 8 and 10, both 32 and 64 bits configurations

LCD SCREEN*

All the MicroBlue LCD microscopes are equipped with a 5.6" LCD screen. Images can be saved directly to an SD card in JPEG format. Resolutions range from 640 x 480 up to 2048 x 1536 pixels. Videos can be shot in AVI format, resolution 640 x 480

PACKAGE CONTENT

Supplied with mains adapter-charger, dust cover, user manual and 5 ml immersion oil for models with an S100x objective. Supplied with a white filter. All packed in a polystyrene box

Check out the product video on YouTube and learn more about the BlueLine. YouTube channel: **Euromex Optics Group B.V.**

MODELS	Mono	Bino	Trino	Digital mono*	Digital LCD*	Maximum objectives	4/10/S40x objectives	S60x objective	S100x objective	Mechanical X-Y stage	LED	NeoLED™	Batteries
MB.1001	•					3	•				•		•
MB.1051	•					4	•			•	•		•
MB.1651	•					4	•	•		•	•		•
MB.1151	•					4	•		•	•	•		•
MB.1052		•				4	•			•		•	•
MB.1652		•				4	•	•		•		•	•
MB.1152		•				4	•		•	•		•	•
MB.1053			•			4	•			•		•	•
MB.1653			•			4	•	•		•		•	•
MB.1153			•			4	•		•	•		•	•
MB.1001-LCD					•	3	•				•		•
MB.1051-LCD					•	4	•			•	•		•
MB.1055				•		4	•			•		•	•
MB.1655				•		4	•	•		•		•	•
MB.1155				•		4	•		•	•		•	•

** See chapter 3 for more information*

● *Monocular head*

● *Binocular head*

● *Trinocular head*

● *Digital monocular head*

● *Digital LCD head*

● *MB.1153*

ACCESSORIES AND SPARE PARTS

EYEPIECES

AE.5571 Wide field eyepiece WF 5x/18 mm
MB.6010 Wide field WF 10x/18 mm eyepiece with pointer
MB.6010-P Wide field 10x/18 mm eyepiece with pointer
MB.6010-M Wide field 10x/18 mm eyepiece with micrometer scale
MB.6015 Wide field WF 15x/11 mm eyepiece
MB.6020 Wide field WF 20x/9 mm eyepiece
MB.6099 Pair of eyecups

OBJECTIVES

MB.7004 Achromatic 4x/0.10 objective, 35 mm parfocal
MB.7010 Achromatic 10x/0.25 objective, 35 mm parfocal
MB.7020 Achromatic 20x/0.40 objective, 35 mm parfocal
MB.7040 Achromatic S40x/0.65 objective, 35 mm parfocal
MB.7060 Achromatic S60x/0.85 objective, 35 mm parfocal
MB.7000 Achromatic S100x/1.25 objective, 35 mm parfocal

CAMERA ACCESSORIES

AE.5130 Universal SLR adapter with built-in 2x lens for standard 23.2 mm tube. Needs T2 adapter
AE.5025 T2 adapter for Nikon D SLR digital camera
AE.5040 T2 adapter for Canon EOS SLR digital camera

MISCELLANEOUS

MB.9710 Frosted filter
MB.9975 External mains adapter-charger 100-240 Vac/5 Vdc (50/60 Hz)
MB.9981 1 W LED replacement unit
MB.9991 1 W NeoLED™ replacement unit
AE.5202 Blue filter, diameter 32 mm
AE.5203 Yellow filter, diameter 32 mm
AE.5204 Neutral gray filter, diameter 32 mm
AE.5205 Green filter, diameter 32 mm
AE.5207 Blue filter plexiglass, diameter 32 mm

MB.9900 Aluminum transport case
AE.9918 Nylon microscope bag (25 x 39 x 19 cm)

DISPOSABLES

PB.5155 Microscope slides 76 x 26 mm, ground edges, 50 pieces per pack
PB.5157-W Microscope slides 76 x 26 mm, ground edges. White frosted side, 50 pieces per pack
PB.5157-B Microscope slides 76 x 26 mm, ground edges. Blue frosted side, 50 pieces per pack
PB.5165 Cover glasses 18 x 18 mm, thickness 0.13-0.17 mm, 100 pieces
PB.5168 Cover glasses 22 x 22 mm, thickness 0.13-0.17 mm, 100 pieces
PB.5245 Lens cleaning paper, 100 sheets per pack
PB.5255 Immersion oil, n = 1.482 (25 ml)
PB.5274 Isopropyl alcohol 99% (200 ml)
PB.5275 Cleaning kit: lens cleaning fluid, lint free lens tissue, brush, air blower, cotton swabs
PB.5276 Microscope maintenance and servicing kit, 16 pcs: cleaning brush, 6 pcs screwdriver set, air blower, 3 pcs Allen key, 1.5, 2, 2.5 mm, lens cleaning fluid 20 ml, cleaning cloth 140 x 140 mm, 100 pcs lens tissue sheets, tube of maintenance grease, 10 ml bottle of oil, packed in a nice toolbox

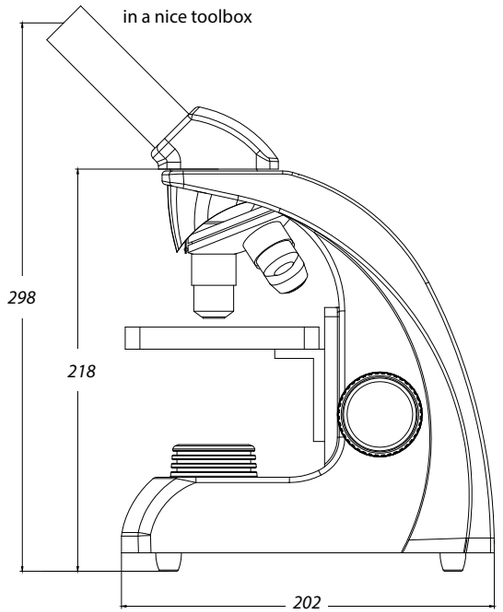

about
objectives

Most common microscope objectives come in different types:

Achromatic objectives Usually contain one or a pair of lenses and correct for color and have a good flat field. If there are aberrations they occur in the outer area of the image

Semi plan objectives Contain one or more (achromatic) lens elements and have an extended flat field. Semi plan objectives have an improved resolution

Plan objectives Correct even better for color and spherical aberration than semi plan objectives. Plan objectives have an excellent flat field and produce superb image quality

Apochromatic objectives Designed for color and spherical aberration correction on a minimum of three wavelengths. These objectives offer the best flat field correction

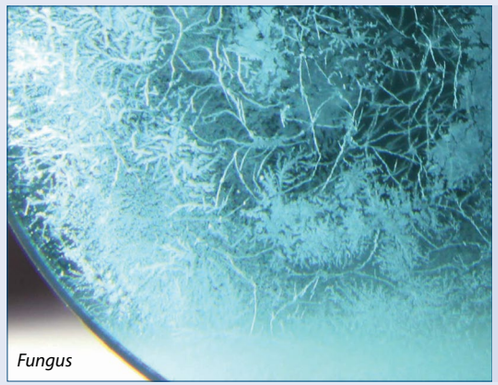
Fungus

ANTI-FUNGUS TREATED

Fungus spores are parasitic, travel in the air and can settle inside lenses. High temperatures, humidity and environments that are dark and unventilated encourage fungus growth

The optical components are anti-fungus treated. Nevertheless it is best to minimize the possibility of fungus by storing the microscopes in well-ventilated rooms with moderate temperatures and low humidity

BIOLOGICAL MICROSCOPES

BlueLine DUTCH QUALITY

NeoLED™ euromex optical technology

EcoBlue

EC.1001

The modern microscopes of the EcoBlue series are especially developed for educational purposes with primary focus on ergonomics and excellent price/quality ratio. These microscopes are supplied with secured eyepieces and adjustable rack stop to prevent damage to sample and objectives

MONOCULAR MODEL EC.1001
355 (h) x 170 (w) x 220 (d) | 2.48 kg
BINOCULAR MODEL EC.1152
360 (h) x 170 (w) x 214 (d) | 2.95 kg
POLARIZATION MODEL EC.1001-P-HLED
360 (h) x 170 (w) x 214 (h) | 3.35 kg

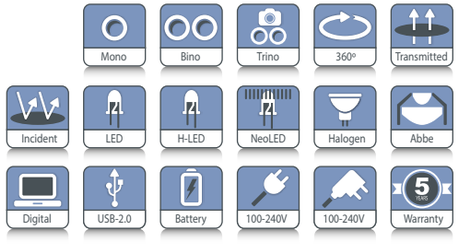

HIGHLIGHTS

- **Monocular, binocular and trinocular models with WF 10x/18 mm eyepiece(s)**
- **Models with integrated 5 MP CMOS camera**
- **Models for polarization applications**
- **Revolving nosepiece with four achromatic objectives**
- **Models with integrated mechanical stage available**
- **Coaxial coarse and fine adjustments with rack stop**
- **Height adjustable Abbe condenser with iris diaphragm and filter holder**
- **1 W LED illumination with integrated power supply**
- **1 W NeoLED™ illumination with rechargeable batteries and external 100-240 Vac mains/charger adapter**
- **Ergonomic stand**
- **Warranty 5 years**

EC.1101-P-HLED

SPECIFICATIONS

EYEPIECE(S)

Wide field WF 10x/18 mm eyepiece with pointer.
The eyepieces of the binocular and trinocular models are supplied without pointer

HEAD

Monocular models with 45° inclined tubes. Binocular and trinocular models have 30° inclined tubes. The interpupillary distance is adjustable between 48 and 75 mm. All binocular and trinocular models have a ± 5 diopter adjustment on left tube. All heads are 360° rotatable. Models with an integrated USB-2.0 camera are supplied with a 5.0 MP 1/2.8" CMOS sensor with a resolution of 2560 x 1920 pixels. The trinocular head has a fixed light path beam splitter (50:50) and generates an erect image. The EcoBlue can also be supplied with a discussion head

NOSEPIECE

Revolving nosepiece for four objectives on ball bearings. Models for polarization are supplied with swing-out analyzer

OBJECTIVES

Achromatic 4x/0.10, 10x/0.25 and S40x/0.65 objectives. Models EC.1151, EC.1152 and EC.1153 also have an S100x oil immersion objective. The S40x, S60x and S100x oil immersion objectives are spring loaded.
All optics are anti-fungus treated and anti-reflection coated for maximum light throughput

FOCUSING

Coaxial coarse and fine adjustments, 200 graduations, 12.5 µm per graduation, 2.5 mm per rotation, total travel range is approximately 15 mm. Supplied with an adjustable rack stop to prevent damage to sample and objectives. The coarse adjustments are equipped with friction control

STAGE

Plain 123 x 119 mm stage with two non-removable object clamps (optional EC.9500 attachable 51 x 26 mm X-Y mechanical stage available). Plain 123 x 128 mm stage with integrated 70 x 27 mm X-Y mechanical stage. The models for polarization are supplied with 129 mm circular stage, 360° rotatable, two object clamps and swing-out analyzer mounted on the lamp house

CONDENSER

Height adjustable Abbe condenser N.A. 1.25 with iris diaphragm and filter holder. The models for polarization have a rack & pinion adjustment, all other models carry a helicoidal adjustment

ILLUMINATION

Monocular models are supplied with a 1 W LED illumination with integrated power supply. Binocular and trinocular models are supplied with an adjustable 1 W NeoLED™ illumination system for increased light output. Models EC.1x51, EC.1x52 and EC.1x53 (x=0, 6 or 1) are supplied with rechargeable batteries and an external 100-240 V battery charger/mains adapter

The models for polarization are supplied with H-LED illumination for correct color rendering (very similar to the halogen light spectrum) and an integrated 100-240 V power supply. However 20 W halogen illumination is also available on special request

CAMERA AND SOFTWARE

Models with integrated 5 MP CMOS USB-2.0 camera are supplied with the ImageFocus Plus capture and measurement software. Besides capturing of images and videos, this software allows measurements on still and live images and annotations on captured images. Compatible with Windows 7, 8 and 10, both 32 and 64 bits configurations

PACKAGE CONTENT

Supplied with power cord or mains adapter-charger, dust cover, spare fuse, user manual and 5 ml immersion oil for models with an S100x objective. Models for polarization with halogen illumination are supplied with blue filter, models with LED illumination are supplied with a white filter.
All packed in a polystyrene box

Check out the product video on YouTube and learn more about the BlueLine. YouTube channel: **Euromex Optics Group B.V.**

MODELS	Mono	Bino	Trino	Digital [1]	S60x objective	S100x objective	Mechanical X-Y stage[2]	LED	NeoLED™	Batteries [3]	Polarization [4]
EC.1001	•							•			
EC.1101	•					•		•			
EC.1601	•				•			•			
EC.1051	•						•	•		•	
EC.1151	•					•	•	•		•	
EC.1651	•				•		•	•		•	
EC.1052		•					•		•	•	
EC.1152		•				•	•		•	•	
EC.1652		•			•		•		•	•	
EC.1053			•				•		•	•	
EC.1153			•			•	•		•	•	
EC.1653			•		•		•		•	•	
EC.1005	•			•				•			
EC.1105	•			•		•		•			
EC.1605	•			•	•			•			
EC.1001-P-HLED	•							• [4]			•
EC.1601-P-HLED	•				•			• [4]			•
EC.1002-P-HLED		•						• [4]			•
EC.1602-P-HLED		•			•			• [4]			•
EC.1003-P-HLED			•					• [4]			•
EC.1603-P-HLED			•		•			• [4]			•

[1] See chapter 3 for more information
[2] Integrated mechanical stage with 70 x 27 mm X-Y travel range
[3] With an external 100-240 V battery charger/mains adapter
[4] Polarization models can also be supplied with S60x or S100x objectives; replace second digit of model number with resp. 6 or 1, e.g. EC.1602-P-HLED, EC.1103-P-HLED, etc

ACCESSORIES AND SPARE PARTS

EYEPIECES

AE.5571 Wide field eyepiece WF 5x/18 mm
EC.6010 WF 10x/18 mm eyepiece
EC.6010-M WF 10x/18 mm eyepiece with micrometer scale
EC.6010-C WF 10x/18 mm eyepiece with crosshairs
EC.6015 WF 15x/12 mm eyepiece
EC.6110 WF 10x/18 mm eyepiece with micrometer 10/100
EC.6099 Pair of eyecups

OBJECTIVES

EC.7004 Achromatic 4x/0.10 objective. WD 37.5 mm
EC.7010 Achromatic 10x/0.25 objective. WD 6.8 mm
EC.7020 Achromatic 20x/0.40 objective. WD 2.0 mm
EC.7040 Achromatic S40x/0.65 objective. WD 0.6 mm
EC.7060 Achromatic S60x/0.85 objective. WD 0.185 mm
EC.7000 Achromatic S100x/1.25 oil immersion objective. WD 0.195 mm

MISCELLANEOUS

EC.9500 Attachable mechanical X-Y stage, translation range 51 x 26 mm, with double Vernier and separate horizontal adjustments knobs
EC.9710 Frosted white filter
EC.9981 1 W LED replacement unit
EC.9991 1 W NeoLED™ replacement unit
EC.9994 1 W H-LED rep lacement unit
EC.9975 External mains/charger adapter 100-240 Vac/5 Vdc (50/60 Hz)
AE.5511 Discussion head
AE.5202 Blue filter, Ø 32 mm
AE.5203 Yellow filter, Ø 32 mm
AE.5204 Neutral gray filter, Ø 32 mm
AE.5205 Green filter, Ø 32 mm
AE.5207 Blue filter plexiglass, Ø 32 mm
SL.1379 Spare halogen 20 W 12 V bulb for polarization models
AE.9918 Nylon microscope bag (25 x 39 x 19 cm)

POLARIZATION ATTACHMENTS

AE.5150 Simple polarization attachment. Analyzer Ø 18 mm mounted in eyepiece (rotatable), polarizer Ø 32 mm placed in filter holder
AE.5152 Simple polarization attachment. Analyzer mounted over eyepiece (rotatable) and polarizer Ø 32 mm in filter holder
AE.5153 Polarization attachment. Analyzer mounted over eyepiece and small (100 x 65 mm) 360° rotatable stage with built-in polarizer to place on plain stage

WF = Wide field
WD = Working distance

● *EC.1152*

AE.5154 Polarizer in mount, to be placed over eyepiece

AE.5155-P Polarization kit with analyzer in slider and small rotatable (100 x 65 mm) stage with two clamps to be mounted on plain stage of EcoBlue. Polarization filter to be mounted on the lamphouse

AE.5158 Polarization kit with analyzer in slider and small rotatable (75 x 50 mm) stage with two clamps to be mounted on X-Y stage of EcoBlue. 360° Rotatable polarization filter to be mounted on the lamphouse

AE.5158-P Polarization kit with analyzer in slider and small rotatable (100 x 65 mm) stage with two clamps to be mounted on plain stage of EcoBlue. 360° Rotatable polarization filter to be mounted on the lamphouse

CAMERA ACCESSORIES

AE.5130 Universal SLR camera adapter with 2x projection lens for 23.2 mm tubes. Needs T2 adapter

AE.5025 T2 adapter for Nikon D digital SLR cameras

AE.5040 T2 adapter for Canon EOS digital SLR cameras

Other T2 adapters on request

DISPOSABLES

PB.5155 Microscope slides 76 x 26 mm, ground edges, 50 pieces per pack

PB.5157-W Microscope slides 76 x 26 mm, ground edges. White frosted side, 50 pieces per pack

PB.5157-B Microscope slides 76 x 26 mm, ground edges. Blue frosted side, 50 pieces per pack

PB.5165 Cover glasses 18 x 18 mm, thickness 0.13-0.17 mm, 100 pieces

PB.5168 Cover glasses 22 x 22 mm, thickness 0.13-0.17 mm, 100 pieces

PB.5245 Lens cleaning paper, 100 sheets per pack

PB.5255 Immersion oil, n = 1.482 (25 ml)

PB.5274 Isopropyl alcohol 99% (200 ml)

PB.5275 Cleaning kit: lens cleaning fluid, lint free lens tissue, brush, air blower, cotton swabs

PB.5276 Microscope maintenance and servicing kit, 16 pcs: cleaning brush, 6 pcs screwdriver set, air blower, 3 pcs Allen key, 1.5, 2, 2.5 mm, lens cleaning fluid 20 ml, cleaning cloth 140 x 140 mm, 100 pcs lens tissue sheets, tube of maintenance grease, 10 ml bottle of oil, packed in a nice toolbox

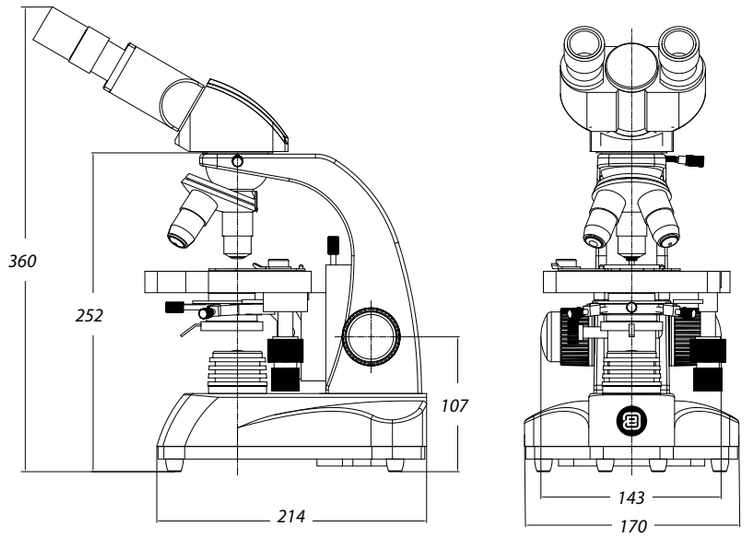

about

microscope basics

A compound microscope consists of a group of lenses (called objective) which focuses a real image of the object inside the microscope. A second group of lenses (called eyepiece) magnifies this image and projects it on the retina of the eye. This compound optical system (objective - eyepiece) together with other mechanical components are the basics of a modern microscope

HEAD

The 30° inclined trinocular viewing head is equipped with a 23.2 mm photo port. The Siedentopf head corrects interpupillary distances to the users preference. A beam splitter inside the head divides the light between the eyepieces and the camera with diopter settings

THE NOSEPIECE

A rotatable metal turret holding four microscope objectives for precise switching of magnifications. The revolver is mounted reversed for more workspace

STAGE

Move the specimen slide in the X or Y direction. Low positioned stage controls prevent fatigue

COARSE AND FINE FOCUSING SYSTEM

The full metal mechanical system moves the specimen in focus. With rack stop to prevent damage to prepared microscopy slides and objectives

MICROSCOPE BASE AND ARM

A large base guarantees the necessary stability of the microscope. The arm includes an integrated carrying grip for easy and safe transportation

CORDED AND CORDLESS USE

The built-in rechargeable batteries enable the microscope to be used both corded and cordless

DIGITAL MICROSCOPY

Modern microscopy uses CMOS, CCD or HD cameras for digital output to computer or HDMI displays. Users can use ImageFocus analysis software to capture, edit, analyze and share microscopy images

TRINOCULAR TUBE

The trinocular tube connects cameras used for digital microscopy

EYEPIECES

The WF 10x/18 mm are Wide Field eyepieces with 10x magnification and 18 mm field number

OBJECTIVES

Microscope objectives are crucial for determining magnification and resolution of the image. International standards are used during production. Typical objective magnifications are 4x/10x/40x/100x

CONDENSER

The 1.25 NA condenser's diaphragm maximizes the resolution of the optical system and also allows adjustment of contrast. Color or density filters can be placed in the filter holder

COLLECTOR LENS SYSTEM AND NEOLED™ LIGHT SOURCE

This lens system maximizes light output. The innovative NeoLED™ design increases the light output even more, while less energy is required. The total system enables higher resolutions, very close to the theoretical diffraction limit of the optics

BlueLine DUTCH QUALITY

NeoLED™ euromex optical technology

FEATURED

BioBlue

The modern microscopes of the BioBlue series are especially developed for educational purposes with primary focus on ergonomics and today's quality standards. These microscopes are supplied with secured eyepieces and adjustable rack stop to prevent damage to sample and objectives

● *BB.4240*

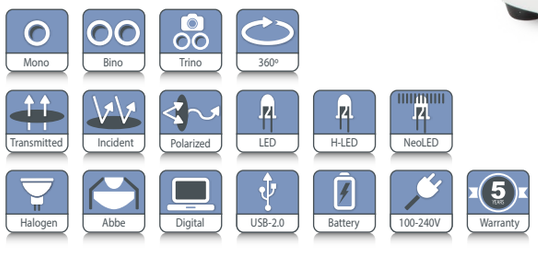

MONOCULAR MODEL BB.4200
320 (h) x 176 (w) x 227 mm (d) | 3.0 kg
BINOCULAR MODEL BB.4260
360 (h) x 176 (w) x 227 mm (d) | 4.0 kg
POLARIZATION MODEL BB.4200-P-HLED
360 (h) x 176 (w) x 227 mm (d) | 4.4 kg

● *BB.4260*

HIGHLIGHTS

- **WF 10x/18 mm eyepiece(s)**
- **BB EVO models with WF 10x/20 mm eyepieces and Köhler NeoLED™ illumination**
- **Models with integrated 5.0 MP CMOS camera**
- **Models for polarization applications**
- **Reversed nosepiece for four semi plan objectives**
- **Integrated X-Y mechanical stage**
- **Coaxial coarse and fine adjustments with rack stop**
- **Height adjustable Abbe condenser with iris diaphragm and filter holder**
- **Monocular models with 1 W LED illumination**
- **Binocular and trinocular models supplied with 1 W NeoLED™ illumination for increased light output**
- **LED models with rechargeable batteries and integrated power supply**
- **Ergonomic stand**
- **Warranty 10 years**

SPECIFICATIONS

EYEPIECE(S)

Wide field WF 10x/18 mm secured eyepiece with pointer for monocular models. The eyepieces of the binocular and trinocular models are supplied without pointer. The BioBlue EVO models are supplied with WF 10x/20 mm eyepieces

HEAD

Monocular models with 45° inclined tubes. Binocular and trinocular models have 30° inclined tubes, interpupillary distance is adjustable between 48 and 75 mm and equipped with a ± 5 diopter adjustment on the left tube. All heads are 360° rotatable and secured with a screw. The BioBlue microscope can also be supplied with a discussion head. The trinocular head has a fixed light path beam splitter (50:50) and generates an erect image. Models with an integrated USB-2.0 camera are supplied with a 5.0 MP 1/2.8" CMOS sensor with a resolution of 2560 x 1920 pixel

NOSEPIECE

Reversed quadruple nosepiece on ball bearings. Models for polarization are supplied with a swing-out analyzer

OBJECTIVES

All models are supplied with semi plan 4x/0.10, 10x/0.25 and S40x/0.65 objectives. Models with an S60x/0.85 or S100x/1.25 oil immersion objective are also available. The S40x, S60x and S100x oil immersion objectives are spring loaded
All optics are anti-fungus treated and anti-reflection coated for maximum light throughput

FOCUSING

Coaxial coarse and fine adjustments with 200 graduations. Precision 2 µm per graduation, 0.4 mm per rotation

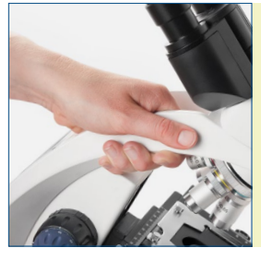

The ergonomic carrying grip enables easy transportation

Total travel range is approximately 23 mm. Supplied with an adjustable rack stop to prevent damage to sample and objectives. The coarse adjustments are equipped with friction control

STAGE

130 x 130 mm with mechanical 70 x 28 mm X-Y translation stage except for models BB.4200 and BB.4205. These models have a 120 x 120 mm plain stage supplied with two non-removable object clamps. The models for polarization are supplied with 129 mm circular stage, 360° rotatable and two object clamps

360° rotatable circular stage for polarization

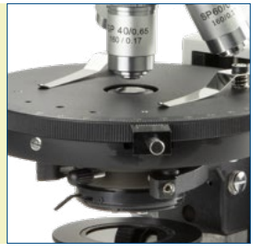

POLARIZATION EQUIPMENT

The swing-out analyzer is mounted in a slider under the head. The rotatable 360° polarizer fits on the collector lamp

CONDENSER

Height adjustable Abbe condenser N.A. 1.25 with iris diaphragm and filter holder

ILLUMINATION

Binocular and trinocular models are supplied with an adjustable 1 W NeoLED™ illumination system for increased light output. Monocular models have a standard adjustable 1 W LED illumination. The models for polarization are supplied with H-LED illumination for correct color rendering (very similar to the halogen light spectrum) and an integrated 100-240 V power supply. However 20 W halogen illumination is also available for polarization models on special request. The EVO models are equipped with Köhler NeoLED™ illumination. All BioBlue microscopes – except halogen models – are supplied with rechargeable batteries and integrated power supply for cordless operation

CAMERA AND SOFTWARE

Models with an integrated 5 MP CMOS USB-2.0 camera are supplied with the ImageFocus Plus software. Besides capturing images and videos, this software also allows measurements on still and live images and annotations on captured images. Compatible with Windows 7, 8 and 10, both 32 and 64 bits configurations

PACKAGE CONTENT

Supplied with power cord, dust cover, a spare fuse, user manual and 5 ml immersion oil for models with S100x objective. Models for polarization with halogen illumination are supplied with a blue filter, models with LED illumination are supplied with a white filter. All models are supplied with a crosshairs eyepiece for centering. All packed in a polystyrene box

● *Monocular head*

● *Binocular head*

● *Trinocular head*

● *Digital monocular head*

● *Digital binocular head*

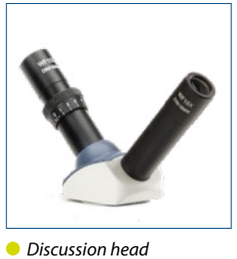

● *Discussion head*

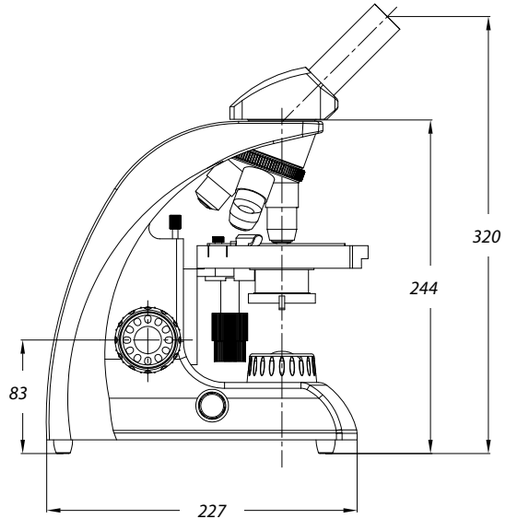

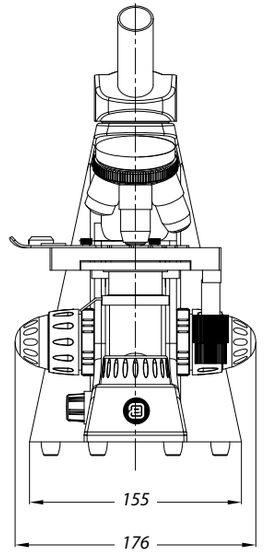

YouTube

Check out the product video on YouTube and learn more about the BlueLine. YouTube channel: **Euromex Optics Group B.V.**

MODELS	Mono	Bino	Trino	Digital	4/10/40x SMP objectives	S60x SMP objective	S100x SMP objective	Mechanical X-Y stage	LED	Neo-LED™	Köhler illumination[1]	Polarization [2]
BB.4200	•				•				•			
BB.4220	•				•			•	•			
BB.4240	•				•	•		•	•			
BB.4250	•				•		•	•	•			
BB.4260		•			•		•	•		•		
BB.4260-E		•			•		•	•		•	•	
BB.4263		•			•	•		•		•		
BB.4243			•		•	•		•		•		
BB.4253			•		•		•	•		•		
BB.4253-E			•		•		•	•		•	•	
BB.4205	•			•	•				•			
BB.4225	•			•	•			•	•			
BB.4245	•			•	•	•		•	•			
BB.4255	•			•	•		•	•	•			
BB.4267		•		•	•		•	•		•		
BB.4269		•		•	•	•		•		•		
BB.4220-P-HLED	•				•				•			•
BB.4240-P-HLED	•				•	•			•			•
BB.4261-P-HLED		•			•					•		•
BB.4263-P-HLED		•			•	•				•		•
BB.4260-P-HLED		•			•		•			•		•
BB.4241-P-HLED			•		•					•		•
BB.4243-P-HLED			•		•	•				•		•
BB.4253-P-HLED			•		•		•			•		•

[1] EVO models are supplied with WF 10x/20 mm eyepieces and Köhler NeoLED(tm) illumination

[2] Polarization models are supplied with H-LED illumination - very similar light spectrum to the halogen illumination - and an eyepiece with crosshairs for centering. 20 W halogen illumination is also available for polarization models on special request

ACCESSORIES AND SPARE PARTS

EYEPIECES

AE.5571 Wide field eyepiece WF 5x/18 mm
AE.5572 Wide field eyepiece WF 10x/18 mm
AE.5572-E Wide field eyepiece WF 10x/20 mm
AE.5573 Wide field eyepiece WF 15x/12 mm
AE.5573-E Wide field eyepiece WF 15x/12 mm for BB EVO
AE.5574 Wide field micrometer eyepiece 10 mm/100
AE.5581 Wide field eyepiece WF 10x/18 mm with pointer
AE.5581-E Wide field eyepiece WF 10x/20 mm with pointer for BB EVO
AE.5582 Wide field eyepiece WF 20x/11.5 mm
AE.5582-E Wide field eyepiece WF 20x/12.5 mm for BB EVO
AE.5365 Eyecup for eyepiece
AE.5365-E Pair of eyecups for eyepieces
AE.1110 Stage micrometer 1 mm/ 100 parts

OBJECTIVES

AE.5591 Semi plan objective 4x/0.10. WD 37.5 mm
AE.5593 Semi plan objective 10x/0.25. WD 6.54 mm
AE.5594 Semi plan objective 20x/0.40. WD 1.2 mm
AE.5597 Semi plan objective S40x/0.65. WD 0.68 mm
AE.5599 Semi plan objective S60x/0.75. WD 0.2 mm
AE.5601 Semi plan objective S100x/1.25 oil immersion. WD 0.22 mm

MISCELLANEOUS

AE.5511 Discussion head
AE.5202 Blue filter, Ø 32 mm
AE.5203 Yellow filter, Ø 32 mm
AE.5204 Neutral gray filter, Ø 32 mm
AE.5205 Green filter, Ø 32 mm
AE.5207 Blue filter plexiglass, Ø 32 mm
BB.4300 Aluminum case
AE.9918 Nylon microscope bag (25 x 39 x 19 cm)
BB.9602 Analyzer in slider
AE.9981 1 W LED replacement unit
AE.9991 1 W NeoLED™ replacement unit
SL.1379 Spare halogen 20 W 12 V bulb for BioBlue polarization models
AE.5227 Glass fuses 1 A 250 V, 10 pieces

CAMERA ACCESSORIES

AE.5130 Universal SLR camera adapter with 2x projection lens for 23.2 mm tubes. Needs T2 adapter
AE.5025 T2 adapter for Nikon D digital SLR cameras
AE.5040 T2 adapter for Canon EOS digital SLR cameras
Other T2 adapters on request

DISPOSABLES

PB.5155 Microscope slides 76 x 26 mm, ground edges, 50 pieces
PB.5165 Cover glasses 18 x 18 mm, thickness 0.13-0.17 mm, 100 pieces
PB.5168 Cover glasses 22 x 22 mm, thickness 0.13-0.17 mm, 100 pieces
PB.5245 Lens cleaning paper, 100 sheets per pack
PB.5255 Immersion oil, n = 1.482 (25 ml)
PB.5274 Isopropyl alcohol 99% (200 ml)
PB.5275 Cleaning kit: lens cleaning fluid, lint free lens tissue, brush, air blower, cotton swabs
PB.5276 Microscope maintenance and servicing kit, 16 pcs: cleaning brush, 6 pcs screwdriver set, air blower, 3 pcs Allen key, 1.5, 2, 2.5 mm, lens cleaning fluid 20 ml, cleaning cloth 140 x 140 mm, 100 pcs lens tissue sheets, tube of maintenance grease, 10 ml bottle of oil, packed in a nice toolbox

BioBlue microscope with polarization kit

POLARIZATION ATTACHMENTS

Not suitable for the BioBLue EVO models

AE.5150 Simple polarization attachment. Polarizer Ø 18 mm mounted in eyepiece, analyzer 32 mm diameter placed in filter holder
AE.5151 Simple polarization attachment. Polarizer mounted over eyepiece and analyzer 32 mm diameter in filter holder
AE.5152 Polarization attachment. Analyzer mounted over eyepiece and small (75 x 50 mm) 360° rotatable stage with built-in polarizer to be mounted on X-Y stage
AE.5153 Polarization attachment. Analyzer mounted over eyepiece and small (100 x 65 mm) 360° rotatable stage with built-in polarizer to be mounted on plain stage
AE.5154 Polarizer in mount, to place over eyepiece
AE.5155 Polarization kit with analyzer in slider and small rotatable (75 x 50 mm) stage with two clamps to be mounted on X-Y stage. Polarization filter to be mounted on lamphouse
AE.5155-P Polarization kit with analyzer in slider and small rotatable (100 x 65 mm) stage with two clamps to be mounted on plain stage. Polarization filter to be mounted on lamphouse
AE.5156 Simple polarization kit with analyzer in slider and polarization filter to be mounted on lamphouse
AE.5158 Polarization kit with analyzer in slider and small rotatable (75 x 50 mm) stage with two clamps to be mounted on X-Y stage. Rotatable 360° polarization filter to be mounted on lamphouse
AE.5158-P Polarization kit with analyzer in slider and small rotatable (100 x 65 mm) stage with two clamps to be mounted on plain stage. 360° Rotatable polarization filter to be mounted on lamphouse

AE.5150

AE.5151

AE.5152

AE.5154

AE.5155-P

AE.5158-P

AE.5156

BB.4300

AE.9918

BIOLOGICAL MICROSCOPES

BlueLine DUTCH QUALITY

NeoLED™ euromex optical technology

BB.1153-PLi

BioBlue.Lab

The BlueLine flagship BioBlue.Lab is an instrument that precisely matches the highest expectations of microscopy users. All models are equipped with a NeoLED™ illumination system and are available in binocular and trinocular versions

BB.1152-PLi
377 (h) x 205 (w) x 260 mm (d) | 5.4 kg
BB.1153-PLi
448 (h) x 205 (w) x 260 mm (d) | 5.6 kg

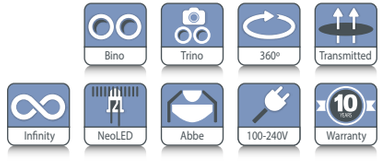

HIGHLIGHTS

- **WF 10x/20 mm eyepieces**
- **Binocular and trinocular models**
- **Reversed quadruple nosepiece**
- **Plan objectives**
- **Infinity and non-infinity optical system**
- **Integrated rackless mechanical stage**
- **3 W NeoLED™ illumination**
- **Ergonomic carrying grip**
- **10 Years warranty**

BioBlue BioBlue.Lab

These ergonomic easy-to-use microscopes have been designed specifically for laboratory and university applications. The 150 x 140 mm mechanical stage has an integrated rackless X-Y stage with 75 x 30 mm travel range

An important feature of the BioBlue.Lab is the rackless stage, which provides a smooth translation of the specimen and highly precise positioning. This plays an integral part in most demanding cytology and histopathology applications

The BioBlue.Lab microscope models offer great functionality and are equipped with WF 10x/20 mm eyepieces, plan and IOS plan 4x/ 10x/ S40x/ S100x infinity corrected objectives

BioBlue.Lab microscopes can also be supplied with IOS plan phase contrast objectives 10x / 20x / S40x / S100x, which are infinity corrected

This enhancement is suitable for a wide variety of routine applications in laboratories and field microscopy

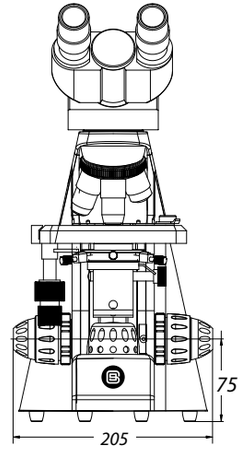

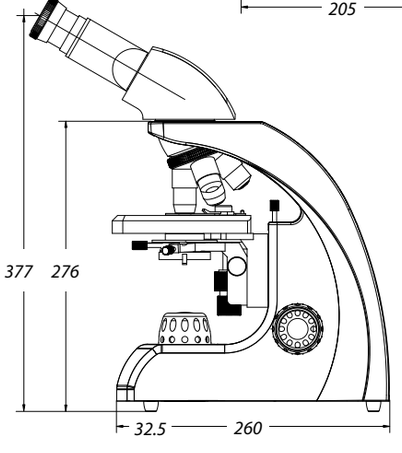

YouTube

Check out the product video on YouTube and learn more about the BlueLine. YouTube channel: **Euromex Optics Group B.V.**

SPECIFICATIONS

EYEPIECES

Wide field WF 10x/20 mm eyepieces

HEAD

Binocular and trinocular models have 30° inclined Ø 30 mm tubes. The interpupillary distance is adjustable between 48 to 75 mm. All models have a ±5 diopter adjustment on left tube. All heads are 360° rotatable and secured with a screw. The trinocular head has a fixed light path beam splitter (50:50) and generates an erect image

NOSEPIECE

Reversed quadruple nosepiece on ball bearings.
Slot for analyzer (BB.9602)

OBJECTIVES

BioBlue.Lab microscopes are equipped with plan, plan IOS and plan phase IOS objectives. Optional 20x/0.40 and S60x/0.85 objectives are also available. The S40x, S60x and S100x objectives are spring loaded.
All optics are anti-fungus treated and anti-reflection coated for maximum light throughput

FOCUSING

Coaxial coarse and fine adjustments with 200 graduations. Precision 1.5 µm per graduation, 0.3 mm per rotation. Total travel range is approximately 28 mm. Supplied with an adjustable rack stop to prevent damage to sample and objectives. The coarse adjustments are equipped with friction control

STAGE

Rackless 150 x 140 mm stage with mechanical 75 x 30 mm X-Y translation stage

CONDENSER

- Height adjustable Abbe condenser N.A. 1.25 with iris diaphragm and filter holder. Supplied with a white filter.
- Height adjustable Zernike N.A. 1.25 phase contrast condenser with filter holder. Additionally the condenser includes a BF position for brightfield microscopy. Supplied with a green filter

ILLUMINATION

Binocular and trinocular models are supplied with an adjustable 3 W NeoLED™ illumination system for increased light output. Power supply with integrated 100-240 Vac

PACKAGE CONTENT

Supplied with power cord, dust cover, a spare fuse, user manual, 5 ml immersion oil and white filter.
All packed in a polystyrene box

MODELS	Binocular	Trinocular	4x/10x/S40x/S100x plan objectives	4x/10x/S40x/S100x plan IOS objectives	10x/20x/S40x/S100x plan phase IOS objectives	Rackless mechanical stage	NeoLED™
BB.1152-PL	•		•			•	•
BB.1153-PL		•	•			•	•
BB.1152-PLi	•			•		•	•
BB.1153-PLi		•		•		•	•
BB.1152-PLPHi	•				•	•	•
BB.1153-PLPHi		•			•	•	•

ACCESSORIES AND SPARE PARTS

EYEPIECES

BB.6010 WF 10x/20 mm eyepiece, 30 mm tube
BB.6110 WF 10x/20 mm eyepiece, 30 mm tube with micrometer reticle
BB.6015 WF 15x/15 mm eyepiece, 30 mm tube
BB.6020 WF 20x/11 mm eyepiece, 30 mm tube
BB.6099 Pair of eyecups

OBJECTIVES

BB.8804 Plan 4x/0.10 objective. WD 17.92 mm
BB.8810 Plan 10x/0.25 objective. WD 2.04 mm
BB.8820 Plan 20x/0.40 objective. WD 1.20 mm
BB.8840 Plan S40x/0.65 objective. WD 0.65 mm
BB.8860 Plan S60x/0.80 objective. WD 0.19 mm
BB.8800 Plan S100x/1.25 oil immersion objective. WD 0.18 mm

BB.7204 Plan 4x/0.10 IOS objective. WD 7.18 mm
BB.7210 Plan 10x/0.25 IOS objective. WD 4.80 mm
BB.7220 Plan 20x/0.40 IOS objective,. WD 5.27 mm
BB.7240 Plan S40x/0.65 IOS objective. WD 0.68 mm
BB.7260 Plan S60x/0.85 IOS objective. WD 0.50 mm
BB.7200 Plan S100x/1.25 oil immersion IOS objective. WD 0.20 mm

BB.7710 Plan Phase 10x/0.25 IOS objective. WD 4.70 mm
BB.7720 Plan Phase 20x/0.40 IOS objective,. WD 1.75 mm
BB.7740 Plan Phase S40x/0.65 IOS objective. WD 0.72 mm
BB.7700 Plan Phase S100x/1.25 oil immersion IOS objective. WD 0.5 mm

MISCELLANEOUS

BB.9602 Analyzer in slider, Ø 25 mm. Fits in nosepiece
BB.9732 Polarization filter, Ø 32 mm. Fits in filter holder
BB.9880 Köhler attachment
BB.9900 Aluminum case
BB.9993 3 W NeoLED™ replacement unit
AE.5227 Glass fuses 1 A 250 V, 10 pieces

CAMERA ACCESSORIES

AE.5130 Universal SLR camera adapter with 2x projection lens for 23.2 mm tubes. Needs T2 adapter
AE.5040 T2 adapter for Canon EOS SLR digital camera
AE.5025 T2 adapter for Nikon D SLR digital camera

DISPOSABLES

PB.5155 Microscope slides 76 x 26 mm, ground edges, 50 pieces per pack
PB.5157-W Microscope slides 76 x 26 mm, ground edges. White frosted side, 50 pieces per pack
PB.5157-B Microscope slides 76 x 26 mm, ground edges. Blue frosted side, 50 pieces per pack
PB.5165 Cover glasses 18 x 18 mm, thickness 0.13-0.17 mm, 100 pieces
PB.5168 Cover glasses 22 x 22 mm, thickness 0.13-0.17 mm, 100 pieces
PB.5245 Lens cleaning paper, 100 sheets per pack
PB.5255 Immersion oil, n = 1.482 (25 ml)
PB.5274 Isopropyl alcohol 99% (200 ml)
PB.5275 Cleaning kit: lens cleaning fluid, lint free lens tissue, brush, air blower, cotton swabs
PB.5276 Microscope maintenance and servicing kit, 16 pcs: cleaning brush, 6 pcs screwdriver set, air blower, 3 pcs Allen key, 1.5, 2, 2.5 mm, lens cleaning fluid 20 ml, cleaning cloth 140 x 140 mm, 100 pcs lens tissue sheets, tube of maintenance grease, 10 ml bottle of oil, packed in a nice toolbox

For phase contrast attachments and accessories see chapter 4

BIOLOGICAL MICROSCOPES

bscope®

FEATURED

bScope®

The well-equipped, versatile and evolutive microscopes of the bScope® series are intensively used in secondary schools, universities, small to mid-sized laboratories and for veterinary applications

Besides an excellent ergonomic design, these robust and attractively priced microscopes are available in several configurations for brightfield and phase contrast observation with HWF 10x/20 mm eyepieces

● *BS.1153-EPLi*

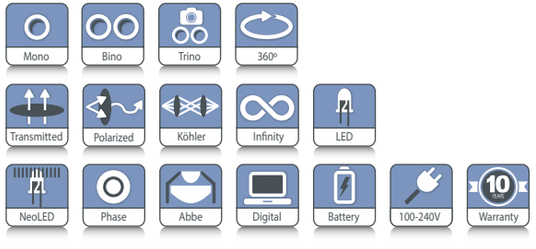

MONOCULAR MODEL BS.1151-XXX
385 (h) x 195 (w) x 235 (d) | 6.3 kg
BINOCULAR MODEL BS.1152-XXX
409 (h) x 195 (w) x 235 (d) | 6.5 kg
TRINOCULAR MODEL BS.1153-XXX
459 (h) x 195 (w) x 235 (d) | 6.6 kg

● *BS.1152-PLi* ● *BS.1151-EPL*

HIGHLIGHTS

- **Versatile and evolutive microscopes**
- **Monocular, binocular and trinocular models**
- **Digital models available**
- **HWF 10x/20 mm eyepieces**
- **Reversed ball-bearing quadruple or quintuple nosepiece**
- **E-plan, plan, E-plan IOS and plan IOS objectives**
- **E-plan phase, E-plan phase IOS, plan phase IOS objectives**
- **Integrated rackless X-Y mechanical stage**
- **3 W NeoLED™ adjustable illumination system**
- **Integrated carrying grip**
- **Cable Storage System and anti-theft system**
- **10 Years warranty**

SPECIFICATIONS

EYEPIECE(S)

High wide field HWF 10x/20 mm secured eyepiece(s) with 20 mm field of view (Ø 23.2 mm tube). Eyepiece of monocular models is supplied with pointer

HEAD

The bScope® is available with a monocular head (45° inclined Ø 23.2 mm tube) or with binocular or trinocular heads, equipped with a Siedentopf type head, 360° rotatable and equipped with 30° inclined Ø 23.2 mm tubes. Binocular and trinocular models have a diopter ± 5 adjustment on the left eyepiece. The interpupillary distance is adjustable between 48 to 76 mm. The models equipped with plan infinity corrected PLi objectives have a unique swiveling system of the eyepiece tubes for ergonomic positioning of the eyepieces in a high and in a low position. The trinocular head comes with a Ø 23.2 mm tube, ensuring a maximum of flexibility. The prisms inside the heads are designed to minimize the light absorption for perfect digital imaging. A unique rotating system allows the ergonomic positioning of both tubes in a high (431 mm) and in a low position (377 mm). Only for IOS modelsModels with an integrated USB-2.0 camera are supplied with a 5.0 MP 1/2.5" CMOS sensor with a resolution of 2592 x 1944 pixels (see chapter 3)

NOSEPIECE

Revolving and reversed ball-bearing quadruple or quintuple nosepiece

OBJECTIVES

The state-of-the-art production techniques and multi layer coatings used for the manufacturing of the bScope® objectives enable the bScope® to be used for the highly demanding applications. World class spherical aberration correction and modern CNC and assembly technology ensure the perfect centering of the objectives

- Brightfield models: E-plan, plan, E-plan IOS infinity corrected, plan IOS infinity corrected 4x/0.10, 10x/0.25, 20x/0.40, S40x/0.65, S60x/0.85 and S100x/1.25 oil immersion objectives
- Phase contrast models: E-plan phase, E-plan phase IOS infinity corrected, plan phase IOS infinity corrected 10x/0.25, 20x/0.40, S40x/0.65 and S100x/1.25 oil immersion objectives

All S40x, S60x and S100x oil immersion objectives are spring loaded. All optics are anti-fungus treated and anti-reflection coated for maximum light throughput

FOCUSING

Double coaxial, low-positioned coarse and fine adjustments with 180 graduations. Precision 1.1 µm, 200 µm per rotation, total travel approximately 19 mm. Supplied with an adjustable rack stop to prevent damage to sample and objectives. The coarse adjustment is equipped with friction control

STAGE

The bScope® is equipped with a scratch resistant 152/197 x 131 mm stage with integrated 75 x 36 mm X-Y rackless mechanical stage, Vernier scale and soft-close removable specimen holder. The rackless stage has no protruding parts, enables smooth movements and is safer in use. Low-positioned X-Y control knobs prevent fatigue during long working sessions. The bScope® can be equipped with a heating stage which can be set up to 50° Celsius by a PID temperature controller. Only available with newly purchased microscopes

CONDENSER FOR BRIGHTFIELD

The standard height adjustable Abbe N.A. 1.25 condenser for brightfield comes with an iris diaphragm and swing-out filter holder

POLARIZATION

The bScope® has an integrated slot above the nosepiece for an optional polarization filter

NEOLED™ ILLUMINATION

The 3 W adjustable Köhler NeoLED™ diascopic illumination is powered by an internal 100-240 V power supply making it suitable for worldwide use. The innovative NeoLED™ design offers larger apertures, allowing the optical system of the bScope® microscope to produce images at higher resolutions, very close to the theoretical diffraction limit of the optics. Other benefits of the NeoLED™ is the low energy consumption, no heating and a long operating lifetime

KÖHLER ILLUMINATION

A Köhler illumination ensures for all infinity corrected IOS models the highest possible contrast and the maximum achievable resolving power. It generates a uniform illumination of the sample and eliminates all interference from dust on lenses and side glare of the light source

The Köhler illumination is optional for non-IOS models

CORDLESS USE

The optional rechargeable batteries turn the bScope® into a cordless system

CSS – CABLE STORAGE SYSTEM

Allows users to easily stow away excess cable length into the back of the instrument during operation and to roll up the power cable for easy storage

CARRYING GRIP

The integrated carrying grip at the back of the microscope ensures safe transportation of the microscope

Swing-out Abbe condenser 0.9/1.25 NA

Ergonomic carrying grip for easy transportation

ANTI-THEFT SLOT

At the back of the microscope a Kensington Security Slot is placed, which can be used to secure the instrument from theft

PACKAGE CONTENT

Smart Styrofoam packaging ensures a low environmental footprint while maintaining a maximum of safety during transport. Supplied with power cord, dust cover, tools, a spare fuse, white filter, user manual and 5 ml immersion oil

Phase contrast models are supplied with green filter and alignment telescope

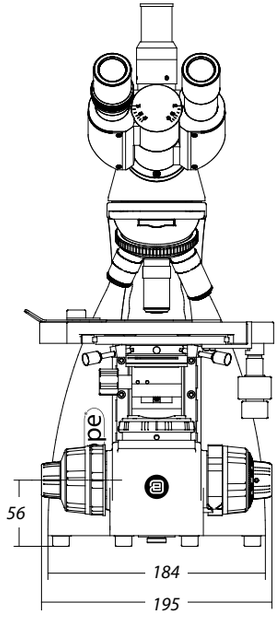

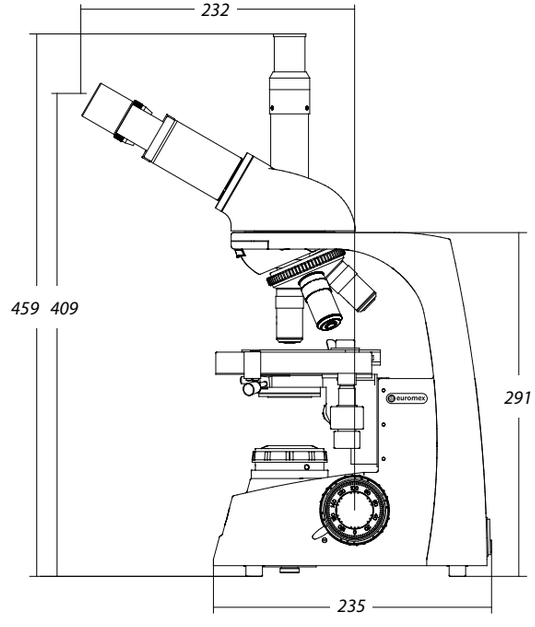

BSCOPE® FOR BRIGHTFIELD

MODELS	Mono	Bino	Trino	HWF 10x/20 mm eyepieces	Quadruple nosepiece E-plan 4/10/S40/S100x	Quintuple nose-piece E-plan IOS 4/10/S40/S100x	Quadruple nosepiece plan 4/10/S40/S100x	Quintuple nosepiece plan IOS 4/10/S40/S100x	Köhler NeoLED™	Neo-LED™	2-position swiveling ergo head
BS.1151-EPL	•			•	•					•	
BS.1152-EPL		•		•	•					•	
BS.1153-EPL			•	•	•					•	
BS.1152-EPLi		•		•		•			•		•
BS.1153-EPLi			•	•		•			•		•
BS.1151-PL	•			•			•			•	
BS.1152-PLi		•		•				•	•		•
BS.1153-PLi			•	•				•	•		•

All models can optionally be supplied with three AA rechargeable batteries

ACCESSORIES AND SPARE PARTS

EYEPIECES

BS.6010 HWF 10x/20 mm eyepiece, Ø 23.2 mm tube
BS.6010-P HWF 10x/20 mm with pointer, Ø 23.2 mm tube
BS.6010-C HWF 10x/20 mm eyepiece with crosshairs, Ø 23.2 mm tube
BS.6010-CM HWF 10x/20 mm eyepiece, Ø 23.2 mm tube with 10/100 micrometer and crosshairs
BS.6012 WF 12.5x/14 mm eyepiece, Ø 23.2 mm tube
BS.6015 WF 15x/11 mm eyepiece, Ø 23.2 mm tube
BS.6020 WF 20x/11 mm eyepiece, Ø 23.2 mm tube
BS.6099 Pair of eyecups for BS.6010
BS.6099-S Pair of eyecups for BS.6012 and BS.6015

OBJECTIVES

BS.7104 E-plan EPL 4x/0.10 objective. WD 37.0 mm
BS.7110 E-plan EPL 10x/0.25 objective. WD 6.61 mm
BS.7120 E-plan EPL 20x/0.40 objective. WD 1.85 mm
BS.7140 E-plan EPL S40x/0.65 objective. WD 0.64 mm
BS.7160 E-plan EPL S60x/0.85 objective. WD 0.20 mm
BS.7100 E-plan EPL S100x/1.25 objective. WD 0.19 mm

BS.7510 E-plan phase EPLPH 10x/0.25 objective. WD 5.95 mm
BS.7520 E-plan phase EPLPH 20x/0.40 objective. WD 2.61 mm
BS.7540 E-plan phase EPLPH S40x/0.65 objective. WD 0.66 mm
BS.7500 E-plan phase EPLPH S100x/1.25 objective. WD 0.36 mm

BS.8204 E-plan EPLi 4x/0.10 IOS objective. WD 18.9 mm
BS.8210 E-plan EPLi 10x/0.25 IOS objective. WD 5.95 mm
BS.8220 E-plan EPLi 20x/0.40 IOS objective. WD 2.61 mm
BS.8240 E-plan EPLi S40x/0.65 IOS objective. WD 0.78 mm
BS.8200 E-plan EPLi S100x/1.25 IOS objective. WD 0.36 mm

BS.8404 Plan PLi 4x/0.10 IOS objective. WD 21.0 mm
BS.8410 Plan PLi 10x/0.25 IOS objective. WD 5.0 mm
BS.8420 Plan PLi 20x/0.40 IOS objective. WD 8.8 mm
BS.8440 Plan PLi S40x/0.65 IOS objective. WD 0.66 mm
BS.8460 Plan PLi S60x/0.85 infinity corrected IOS objective. WD 0.46 mm
BS.8400 Plan PLi S100x/1.25 IOS objective. WD 0.36 mm

CONDENSERS

BS.9102 Abbe condenser 1,25 NA with slot for darkfield and phase contrast sliders
BS.9170 Darkfield stop for BS.9102 condenser
BS.9105 Swing-out Abbe condenser 0.9/1.25 NA

ATTACHMENTS

BS.9647 Polarizer for polarization Ø 16 mm for slider under bScope head
BS.9651 Polarization attachment for lamphouse of bScope with 360° scale
BS.9660 Polarization kit: analyzer under head and polarizer on lamphouse
BS.9880 Köhler attachment

CAMERA ACCESSORIES

AE.5130 Universal Ø 23.2 mm tube adapter with built-in 2x lens for SLR photo camera with APS-C sensor. Needs T2 adapter
AE.5025 T2 adapter for Nikon D SLR digital camera
AE.5040 T2 adapter for Canon EOS SLR digital camera

MISCELLANEOUS

BS.9900 Aluminum transport case
BS.9993 NeoLED™ replacement unit
AE.1370 Set of rechargeable batteries, 3 pieces

DISPOSABLES

PB.5155 Microscope slides 76 x 26 mm, ground edges, 50 pieces per pack
PB.5157-W Microscope slides 76 x 26 mm, ground edges. White frosted side, 50 pieces per pack
PB.5157-B Microscope slides 76 x 26 mm, ground edges. Blue frosted side, 50 pieces per pack
PB.5165 Cover glasses 18 x 18 mm, thickness 0.13-0.17 mm, 100 pieces
PB.5168 Cover glasses 22 x 22 mm, thickness 0.13-0.17 mm, 100 pieces
PB.5245 Lens cleaning paper, 100 sheets per pack
PB.5255 Immersion oil (25 ml). n = 1.482
PB.5274 Isopropyl alcohol 99% (200 ml)

PB.5275 Cleaning kit: lens cleaning fluid, lint free lens tissue/paper, brush, air blower, cotton swabs
PB.5276 Microscope maintenance and servicing kit, 16 pcs: cleaning brush, 6 pcs screwdriver set, air blower, 3 pcs Allen key, 1.5, 2, 2.5 mm, lens cleaning fluid 20 ml, cleaning cloth 140 x 140 mm, 100 pcs lens tissue sheets, tube of maintenance grease, 10 ml bottle of oil, packed in a nice toolbox

For phase contrast attachments and accessories see chapter 4

● *CSS – Cable Storage System*

BIOLOGICAL MICROSCOPES

iscope®

FEATURED

IS.1153-PLi

iScope®

The iScope® microscopes exceed today's standard, as they provide more comfort and convenience for microscopists with ergonomic features such as height adjustable eye tubes and a large rackless stage with double slide holder. The modern design and compact size of the iScope® microscopes allow more working space, safer operation and enable easy storage

The iScope® series is available in various configurations, suitable for high schools, universities, and Life and Biomedical Sciences. Observation methods such as brightfield, phase contrast, cardioid mirror darkfield, basic polarization and fluorescence are available

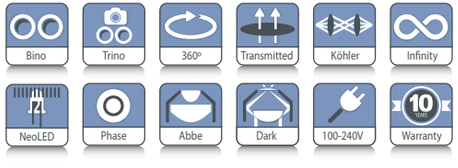

IS.1153-PLi
408 (h) x 210 (w) x 255 (d) mm | 9.0 kg

IS.1152-PLPHi

HIGHLIGHTS

- **EWF 10x/22 mm and EWF10x/20 mm eyepieces**
- **Binocular and trinocular models**
- **Optional multiheads**
- **Optional tilting head**
- **Quintuple reversed nosepiece**
- **E-plan, plan and plan phase objectives**
- **E-plan, plan and plan phase infinity corrected IOS objectives**
- **156 x 138 mm stage or 187/230 x 140 mm rackless stage**
- **Intensity adjustable 3 W NeoLED™ Köhler illumination**
- **iCare sensor for energy saving**
- **CSS - Cable Storage System**
- **10 Years warranty**

SPECIFICATIONS

EYEPIECES

- Extended plan wide field EWF 10x/20 mm eyepieces with 20 mm field of view and adjustable diopter on the left eyepiece for non-infinity corrected systems (Ø 23.2 mm tube)
- Extended plan wide field EWF 10x/22 mm eyepieces with 22 mm field of view and adjustable diopter on both eyepieces for infinity corrected IOS plan and plan phase systems and adjustable diopter on the left tube for EPLi systems (Ø 30 mm tube)

HEAD

Binocular and trinocular Siedentopf type heads with 30° inclined tubes. Interpupillary distance from 48 to 76 mm. The trinocular head of the plan infinity corrected models (IS.1153-PLi) has an optical path selector (100:0 / 50:50) and ± 5 diopter adjustments on both Ø 30 mm tubes. The trinocular head of the E-plan infinity corrected models (IS.1153-EPLi) has a fixed built-in beam splitter (50:50) and ± 5 diopter adjustment on the Ø 30 mm left tube.
The trinocular head of the E-plan finite models (IS.1153-EPL) has a fixed built-in 50:50 beam splitter and one ± 5 diopter adjustment on the Ø 23.2 mm left tube. A unique rotating system allows the ergonomic positioning of both tubes in a high (431 mm) and in a low position (397 mm). The trinocular head comes with a Ø 23.2 mm photo port

ERGONOMIC TILTING HEAD

Optional: the ergonomic 5 to 35° tilting head, supplied with EWF 10x/22 mm eyepieces, interpupillary distance 48-75 mm and optional photo attachment with standard Ø 23.2 mm tube (only infinity corrected models)
To order an iScope® with tilting head use reference IS.1158-xxx
To order an iScope® with tilting head and photo tube attachment use reference IS.1159-xxx

FACE-TO-FACE HEADS

The iScope® can be supplied with two heads in a face-to-face configuration, allowing simultaneous observation by two operators. The Ø 30 mm tubes of the head are equipped with EWF 10x/20 mm eyepieces. The main binocular head has one diopter adjustment, the second head has two diopter adjustments. Only available for the model with plan infinity corrected objectives (IS.1154-PLi). The face-to-face head is equipped with a 2-color laser pointer

MULTIHEAD SYSTEM

The iScope® can be extended with a unique multihead system for in total 2, 3 or 5 heads, allowing simultaneous observation of specimens. The central attachment is equipped with a joystick to move a green and red laser pointer across the entire field of view of all heads. Configurations with one, two or four additional viewing binocular heads, 30° inclined tubes and plan 4x, 10x, S40x, S100x oil immersion infinity corrected IOS objectives. Each extra viewing binocular head is equipped with extended wide field plan EWF 10x/22 mm eyepieces

(references: IS.1156-PLi-x, x = total number of heads)

OBJECTIVES

E-Plan EPL	4x/0.10	10x/0.25	20x/0.40*	S40x/0.65		S100x/1.25 oil
E-Plan EPLi IOS	4x/0.10	10x/0.25	20x/0.40*	S40x/0.65		S100x/1.25 oil
Plan PLi IOS	4x/0.10	10x/0.25	20x/0.40*	S40x/0.65	S60x/0.85*	S100x/1.25 oil
Plan phase PLPH		10x/0.25	20x/0.40	S40x/0.65		S100x/1.25 oil
Plan phase PLPHi IOS		10x/0.25	20x/0.40	S40x/0.65		S100x/1.25 oil

** optional*
All optics are anti-fungus treated and anti-reflection coated for maximum light throughput

NOSEPIECE

Revolving quintuple reversed nosepiece for a maximum of five objectives

STAGE

The iScope® can be equipped with three types of stages:

- 156 x 138 mm stage equipped with integrated 79 x 52 mm X-Y mechanical stage
- 187/230 x 140 mm rackless stage equipped with double slide holder and integrated 79 x 52 mm X-Y mechanical stage. The iScope® rackless stage has no protruding parts, enables more smooth movements and is safer
- 220 x 157 mm ceramic stage with integrated 75 x 50 mm X-Y mechanical stage is protected against marks and scratches with a very tough ceramic surface. The surface also ensures stray light not to be reflected from the stage into the objective

The iScope® can be supplied with a heating stage which can be set up to 50° Celsius by a PID temperature controller. Only available with newly purchased microscopes. Higher temperatures can be achieved on special request

CONDENSER FOR BRIGHTFIELD

The standard height adjustable Abbe N.A. 1.25 condenser for brightfield accepts sliders with phase annuli suitable for plan phase 10x/20x or S40x/S100x oil immersion IOS objectives for economical phase contrast. With magnification indication. A slider with a simple dark stop for darkfield up to 400x magnification is also available

CONDENSER FOR ZERNIKE PHASE CONTRAST

An optional height adjustable Zernike NA. 1.25 phase contrast disc condenser with plan phase 10/20/S40x and S100x oil immersion objectives and darkfield stop position for darkfield contrast up to 400x magnification

FOCUSING

Coaxial coarse and fine adjustments, 200 graduations, 1 µm per graduation, 200 µm per rotation, total travel range is approximately 24 mm. Supplied with an adjustable rack stop to prevent damage to sample and objectives. The coarse adjustments are equipped with friction control

ILLUMINATION

3 W adjustable Köhler NeoLED™ diascopic illumination with internal 100-240 V power supply. The innovative NeoLED™ design offers larger apertures, allowing the optical system of the iScope® microscope to produce images at higher resolutions, very close to the theoretical diffraction limit of the optics. Other benefits of the NeoLED™ is the low energy consumption, no heating and a long operating life span. The Köhler illumination on models with IOS plan and plan phase infinity corrected system provides high contrast and a maximum achievable resolving power of the optics. Also available for other models as option

ICARE SENSOR

The unique iCare Sensor is developed to avoid unnecessary loss of energy. The illumination of the microscope automatically switches off shortly after microscopists step away from their position

IS.1152-EPL

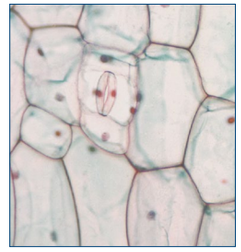

Normal LED

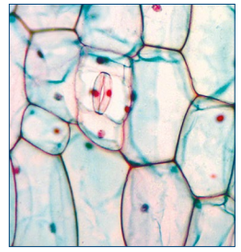

NeoLED™

CSS – CABLE STORAGE SYSTEM

iScope® allows users to easily insert the power cable into the back of the instrument, which enables easy storage. The integrated carrying grip at the back of the microscope ensures safe transportation of the microscope

PACKAGE CONTENT

Supplied with power cord, dust cover, a spare fuse, user manual and 5 ml immersion oil for models with S100x objective. All packed in polystyrene boxes

YouTube

Check out the product video on YouTube and learn more about this microscope. YouTube channel: **Euromex Optics Group B.V.**

NeoLED™

ISCOPE® FOR LIFE SCIENCE (FINITY MODELS)

MODELS	Binocular	Trinocular	Phase contrast	EWF 10x20 mm	E-plan objectives	Plan phase objectives	Mechanical stage	iCare Sensor
IS.1152-EPL	•			•	•		•	•
IS.1153-EPL		•		•	•		•	•
IS.1152-PLPH	•		•	•		•	•	•
IS.1153-PLPH		•	•	•		•	•	•

ISCOPE® FOR LIFE SCIENCE (INFINITY MODELS)

MODELS	Binocular	Trinocular	Phase contrast	EWF 10x22 mm	E-plan IOS objectives	Plan IOS objectives	Plan phase IOS objectives	Mechanical stage	iCare Sensor	Köhler LED
IS.1152-EPLi	•			•	•			•	•	
IS.1153-EPLi		•		•	•			•	•	
IS.1152-PLi	•			•*		•		•	•	•
IS.1153-PLi		•		•*		•		•	•	•
IS.1152-PLPHi	•		•	•*			•	•	•	•
IS.1153-PLPHi		•	•	•*			•	•	•	•

Two tubes with diopter adjustments

ISCOPE® FOR LIFE SCIENCE (INFINITY - ERGONOMIC TILTING HEAD)

MODELS	Bino	Photo attachment	Phase contrast	EWF 10x22 mm	E-plan IOS 4x/10x/ 40x/ 100x objectives	Plan IOS 4x/10x/ 40x/ 100x objectives	Plan phase IOS 10x/20x/ 40x/ 100x objectives	Mechanical rackless stage	iCare Sensor	Köhler LED
IS.1158-EPLi	•			•	•			•	•	
IS.1159-EPLi	•	•		•	•			•	•	
IS.1158-PLi	•			•		•		•	•	•
IS.1159-PLi	•	•		•		•		•	•	•
IS.1158-PLPHi	•		•	•			•	•	•	•
IS.1159-PLPHi	•	•	•	•			•	•	•	•

ISCOPE® FOR LIFE SCIENCE (MULTIHEAD SYSTEMS)

MODELS	Total users	Binocular	Trinocular	EWF 10x20 mm	Plan IOS objectives	Mechanical rackless stage	iCare sensor	Köhler LED
IS.1156-PLi2	2	1x	•	•	•	•	•	•
IS.1156-PLi3	3	2x	•	•	•	•	•	•
IS.1156-PLi5	5	4x	•	•	•	•	•	•
IS.1156-PLi9	9	8	•	•	•	•	•	•

ISCOPE® FOR LIFE SCIENCE (FACE-TO-FACE DUAL HEAD SYSTEM)

MODELS	Total users	Binocular EWF 10x/20 mm	Trinocular EWF 10x/20 mm	E-Plan IOS 4x/10x/ 40x/100x objectives	Plan IOS 4x/10x/ 40x/100x objectives	Mechanical rackless stage	iCare sensor	Köhler LED
IS.1154-PLi	2	2x			•	•	•	•
IS.1154-EPLi	2	2x		•		•	•	
IS.1154-PLi/T	2	1x	1x		•	•	•	•
IS.1154-EPLi/T	2	1x	1x	•		•	•	

IS.115x-EPL stage

IS.115x-PLi rackless stage

ACCESSORIES AND SPARE PARTS

EYEPIECES

IS.6010 EWF 10x/20 mm eyepiece (Ø 23.2 mm tube)

IS.6010-P EWF 10x/20 mm eyepiece with pointer (Ø 23.2 mm tube)

IS.6010-C EWF 10x/20 mm eyepiece with crosshairs (Ø 23.2 mm tube)

IS.6010-CM EWF 10x/20 mm eyepiece with 10/100 micrometer and cross (Ø 23.2 mm tube)

IS.6015 WF 15x/16 mm eyepiece (Ø 23.2 mm tube)

IS.6099 Pair of eyecups, Ø 23.2 mm tube

IS.6210 EWF 10x/22 mm eyepiece (Ø 30mm tube)

IS.6210-C EWF 10x/22 mm eyepiece with crosshairs (Ø 30 mm tube)

IS.6210-P EWF 10x/22 mm eyepiece with pointer (Ø 30 mm tube)

IS.6210-CM EWF 10x/22 mm eyepiece with 10/100 micrometer and crosshairs (Ø 30 mm tube)

IS.6212 WF 12.5x/17 mm eyepiece (Ø 30 mm tube)

IS.6215 WF 15x/16 mm eyepiece (Ø 30 mm tube)

IS.6215-CM WF 15x/16 mm eyepiece with 10/100 micrometer and crosshairs (Ø 30 mm tube)

IS.6220 WF 20x/12 mm eyepiece (Ø 30 mm tube)

IS.6299 Pair of eyecups for infinity models (Ø 30 mm tube)

OBJECTIVES

IS.7104 E-plan EPL 4x/0.10 objective. WD 15.2 mm

IS.7110 E-plan EPL 10x/0.25 objective. WD 5.5 mm

IS.7120 E-plan EPL 20x/0.40 objective. WD 3.5 mm

IS.7140 E-plan EPL S40x/0.65 objective. WD 0.45 mm

IS.7160 E-plan EPL S60x/0.85 objective. WD 0.19 mm

IS.7100 E-plan EPL S100x/1.25 objective. WD 0.13 mm

IS.7710 Plan PLPH 10x/0.25 phase contrast objective. WD 12.2 mm

IS.7720 Plan PLPH 20x/0.40 phase contrast objective. WD 5 mm

IS.7740 Plan PLPH S40x/0.65 phase contrast objective. WD 0.37 mm

IS.7700 Plan PLPH S100x/1.25 oil phase contrast objective. WD 0.13 mm

IS.8804 E-plan EPLi 4x/0.10 IOS objective. WD 15.4 mm

IS.8810 E-plan EPLi 10x/0.25 IOS objective. WD 5.8 mm

IS.8840 E-plan EPLi S40x/0.65 IOS objective. WD 0.43 mm

IS.8800 E-plan EPLi S100x/1.25 IOS objective. WD 0.13 mm

IS.7202 Plan PLi 2x/0.05 IOS objective, WD 18.3 mm. Best to be used together with swing-out condenser

IS.7204 Plan PLi 4x/0.10 IOS objective. WD 15.4 mm
IS.7210 Plan PLi 10x/0.25 IOS objective. WD 10 mm
IS.7220 Plan PLi 20x/0.40 IOS objective. WD 5.1 mm
IS.7240 Plan PLi S40x/0.65 IOS objective. WD 0.54 mm
IS.7260 Plan PLi S60x/0.85 IOS objective. WD 0.14 mm
IS.7200 Plan PLi S100x/1.25 IOS objective. WD 0.13 mm

IS.8910 Plan PLPHi 10x/0.25 phase contrast IOS. WD 10.2 mm
IS.8920 Plan PLPHi 20x/0.40 phase contrast IOS. WD 5.1 mm
IS.8940 Plan PLPHi S40x/0.65 phase contrast IOS. WD 0.5 mm
IS.8900 Plan PLPHi S100x/1.25 oil phase contrast IOS. WD 0.13 mm

CONDENSERS

IS.9102 Standard Abbe condenser 1.25 NA with slot for darkfield and phase contrast sliders
IS.9105 Swing-out 0.9/1.25 N.A. condenser
IS.9170 Slider with darkfield stop

PHASE CONTRAST ATTACHMENTS

IS.9124 Zernike phase contrast set including rotating disc with PLPH 10/20/40/100, brightfield and darkfield position
IS.9127 Zernike phase contrast set including rotating disc with PLPH 10/20/40/100, brightfield and darkfield position
IS.9148 Alignment telescope for phase contrast, Ø 30 mm tube
IS.9149 Alignment telescope for phase contrast, Ø 23.2 mm tube
IS.9190 Slider with phase contrast annuli for 10x and S40x phase contrast objective
IS.9192 Slider with phase contrast annuli for 20x and S100x phase contrast objective
IS.9194 Slider with phase contrast annuli for S40x phase contrast objective

FILTERS

IS.9600 Polarization filter 45 mm for lamphouse
IS.9601 Polarization set: simple rotating polarizer for lamphouse and fixed polarizer mounted under head
IS.9626 Polarization filter for mounting under the head
IS.9700 Blue filter 45 mm for lamphouse
IS.9702 Green filter 45 mm for lamphouse
IS.9704 Yellow filter 45 mm for lamphouse
IS.9706 White opaque filter 45 mm for lamphouse

MISCELLANEOUS

IS.4300 Aluminum transport case for iScope
IS.9880 Köhler attachment
AE.3684 Glass fuses 500 mA 250 V, 10 pieces
SL.5500 NeoLED™ replacement unit

CAMERA ACCESSORIES

AE.5130 Universal SLR adapter with built-in 2x lens for standard 23.2 mm tube. Needs T2 adapter
AE.5025 T2 adapter for Nikon D SLR digital camera
AE.5040 T2 adapter for Canon EOS SLR digital camera

DISPOSABLES
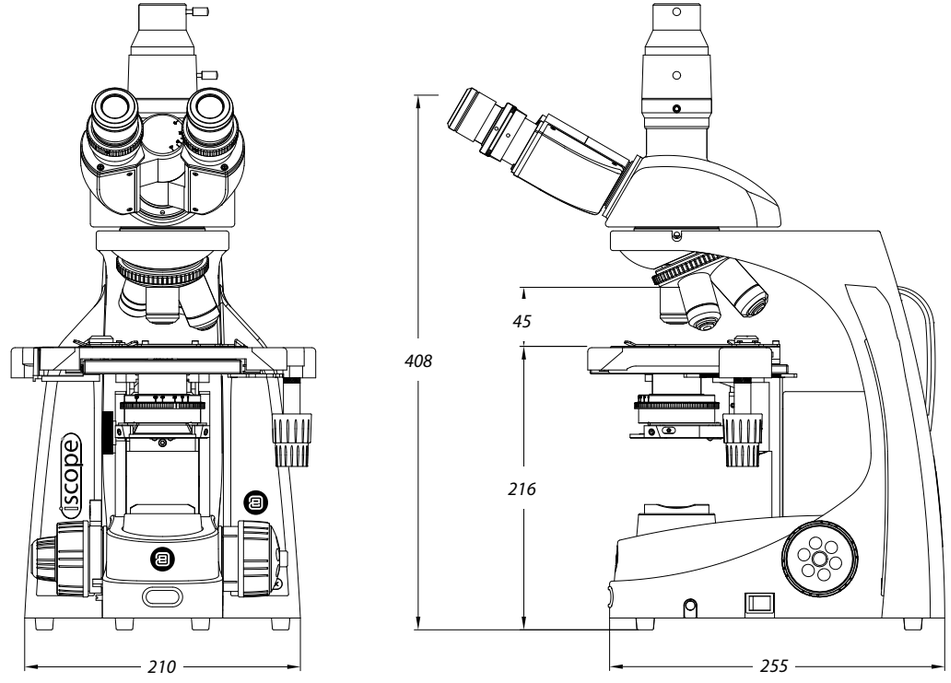
PB.5155 Microscope slides 76 x 26 mm, ground edges, 50 pieces per pack
PB.5157-W Microscope slides 76 x 26 mm, ground edges and frosted side white color, 50 pieces per pack
PB.5157-B Microscope slides 76 x 26 mm, ground edges and frosted side blue color, 50 pieces per pack
PB.5165 Cover glasses 18 x 18 mm, 0.13-0.17 mm, 100 pieces
PB.5168 Cover glasses 22 x 22 mm, 0.13-0.17 mm, 100 pieces
PB.5245 Lens cleaning paper, 100 sheets per pack
PB.5255 Immersion oil, 25 ml. Refraction index n = 1.482
PB.5274 Iso propyl alcohol 99%, 200 ml
PB.5275 Cleaning kit: lens fluid, lint free lens tissue/paper, brush, air blower, cotton swabs
PB.5276 Microscope maintenance and servicing kit, 16 pcs: cleaning brush, 6 pcs screwdriver set, air blower, 3 pcs Allen key, 1.5, 2, 2.5 mm, lens cleaning fluid 20 ml, cleaning cloth 140 x 140 mm, 100 pcs lens tissue sheets, tube of maintenance grease, 10 ml bottle of oil, packed in a nice toolbox